Crane control unit
KST 6 swiveling

The KST 6 is an ergonomically designed swiveling crane control chair which provides a high degree of comfort.

Equipment boxes:
The equipment boxes are vertically and horizontally adjustable. The arrangement of the joysticks, indicators and control devices is customised according to customer specifications. Cabling is carried out through a cross-member in the traverse. (Terminal block)

Driver seat:
As standard the KST 6 is fitted with a KFS 11 seat. The seat itself is fitted with a hydraulic vibration absorption system complete with weight adjustment to ensure that the comfort level is fitted with armrests and a headrest. There is the option to have the seat covered with air-permeable artificial leather.

Cross-member with swivel base:
The cover of the sheet steel cross-member including the driver's seat is forward foldable. Thereby all wirings, terminals and bushings are easily accessible during commissioning and maintenance. Swivel base has zero-clearance bearing and can be locked by a friction brake.

Surface treatment:
Base coat and textured varnish
Standard colour RAL 9011 black

Example

KST 6	-U2	-M1	-F3	-LK	/	KFS 11	/	V64	/	V64.1	/	KL	/	X

Basic unit

KST 6	With equipment boxes

Base unit

U1	Swiveling 180° left, 90° right with friction brake
U2	Swiveling 180° left, 90° right with detent
U3	Electric swiveling 180° left, 90° right
U4	Non swiveling
U5	Without base frame

Attachments

M1	Monitor mounting with monitor housing
M2	Monitor mounting with monitor mounting bracket
M3	Monitor mounting without monitor housing/-mounting bracket
F3	Footrest KBF/716
H	Heater 2 x 2 kW with ventilator
LK	Plate for horizontal manual adjustment for control units +/- 250 mm

Driver seat

KFS 11*	*(Included in the delivery!)*
KFS 9*	
KFS 10*	
KFS 12*	

**Description see driver seat page 229*

3

Technical details may vary based on configuration or application! Technical data subject to change without notice!

KST 6	-U2	-M1	-F3	-LK	/	KFS 11	/	V64	/	V64.1	/	KL	/	X

Mounting for equipment boxes	
V...	Multi-axis controller *(see page 1)*
S...	Single-axis controller *(see page 93)*
D...	Double-handle controller *(see page 70)*
N...	Control-switch *(see page 131)*
...	*More command and indicating devices (see page 202)*

Wiring	
KL	Without, but terminal block built each terminal
KLV	On terminal block 4 mm² with single wire 1 mm² each terminal
KLV	On SPS (SPS provision) with single wire 1 mm² each terminal
KLVA	External wiring single wire highly flexible 1,5 mm², 5 m long each terminal

Special model	
X	Special / customer specified
X¹	Special painted

Option
Radio remote control system

3

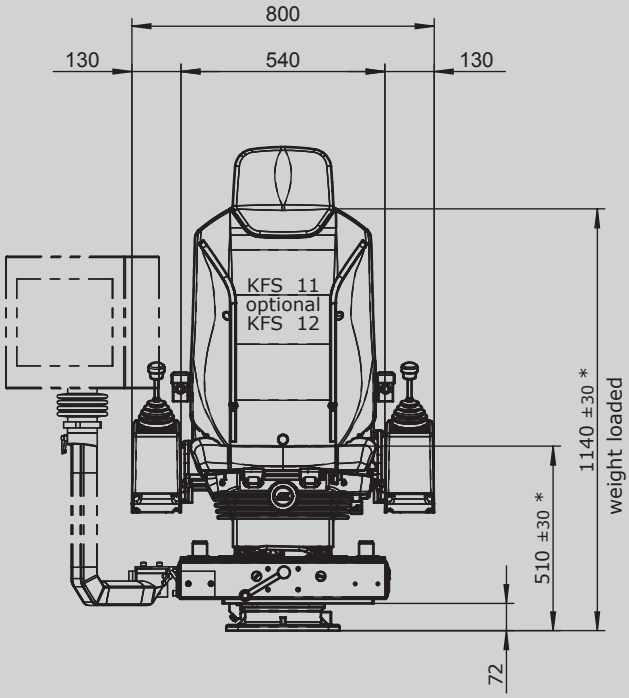

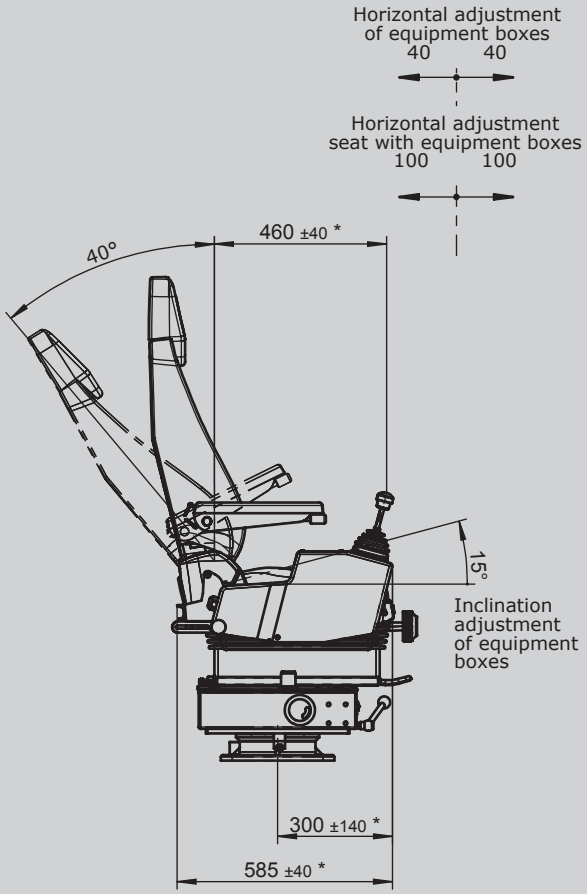

with heating

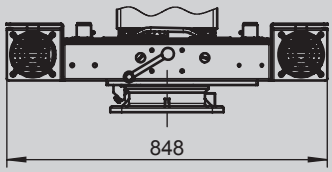

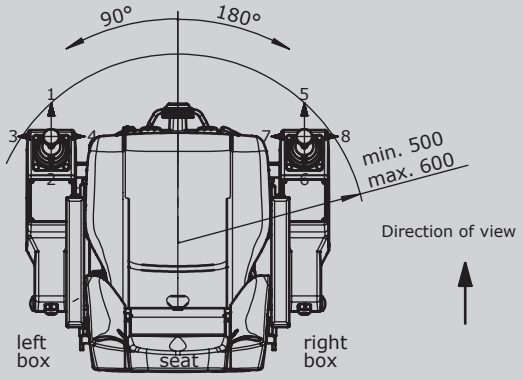

Floor mounting

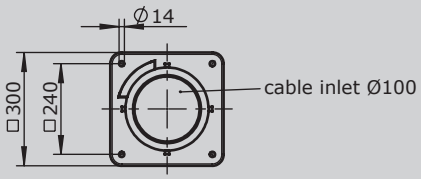

* adjustable

Technical details may vary based on configuration or application! Technical data subject to change without notice!